THREE-DIMENSIONAL SIMULATION OF STEP COVERAGE FOR CONTACT HOLE METALLIZATION

Ernst Strasser and Siegfried Selberherr

Institute for Microelectronics, Technical University Vienna,
Gusshausstrasse 27–29, A–1040 Wien, Austria

Abstract
Accurate simulation of topography processes requires three-dimensional models and algorithms for wafer topography evaluation. In this paper a model for three-dimensional physical vapor deposition is presented which converts information about the angular flux distribution of incident particles into local growth rates along the exposed surface. This model is coupled with an algorithm for general three-dimensional surface advancement to study the step coverage of deposited thin films for contact hole metallization.

1. Introduction

The global flux distributions and arrival rates of material depend on process conditions which are independent of the local surface shape. At a surface point, however, the incident flux is restricted due to shadowing effects of the surface topography. Macroscopic deposition models convert information about material flux and surface reactions into deposition rates along the exposed surface. An algorithm for surface advancement is then applied to change the actual geometry according to the precalculated deposition rate distribution. Several two-dimensional models for the simulation of physical vapor deposition processes reported in the literature are directly applicable to three-dimensional simulation. The problem, however, is the availability of accurate and stable algorithms for three-dimensional surface movement.

2. The Model for Physical Vapor Deposition

A Model for describing two-dimensional profiles of evaporated thin films over steps introduced in 1970 [1], has been successfully used in several simulation programs [2]. This model is directly applicable to three-dimensional simulation. In three dimensions, the components of the growth vector for a point on the surface (described in a spherical coordinate system with polar angle ϑ and azimuth angle φ) can be calculated by:

$$v_x(\vec{x}) = R_d \iint_{\Omega(\vec{x})} F(\varphi, \vartheta)\ \cos\varphi\ \sin\vartheta\ \sin\vartheta\ d\vartheta\ d\varphi \tag{1}$$

$$v_y(\vec{x}) = R_d \iint_{\Omega(\vec{x})} F(\varphi, \vartheta)\ \sin\varphi\ \sin\vartheta\ \sin\vartheta\ d\vartheta\ d\varphi \tag{2}$$

$$v_z(\vec{x}) = R_d \iint_{\Omega(\vec{x})} F(\varphi, \vartheta) \cos\vartheta\ \sin\vartheta\ d\vartheta\ d\varphi \tag{3}$$

where R_d denotes the normalized deposition rate on a flat wafer without shadowing, $\Omega(\vec{x})$ describes the visible area above the wafer at a surface point $\vec{x}$, and $F(\varphi, \vartheta)$ is the angular flux distribution function of incoming particles. Different assumptions on the flux distribution function result in evaporation or sputter deposition processes. Original work on sputter deposition processes assumed the incident particles to arrive equally from all directions [1], subsequent work showed a cosine dependence on ϑ [3]. A general cosine-based flux distribution function may be expressed as [4]:

$$F(\varphi, \vartheta) = \cos^n(A\,\vartheta) \quad for \;\; \vartheta \leq \pi/2A \;\; otherwise \;\; 0. \tag{4}$$

The parameter A restricts the angle of incoming particles, the parameter n allows over-cosine and under-cosine distributions. The total flux of material arriving at some surface point must be integrated over the visible solid angle $\Omega(\vec{x})$. Therefore the region above the wafer is divided up into several patches $(N_\varphi \cdot N_\vartheta)$ as shown in Fig. 1.

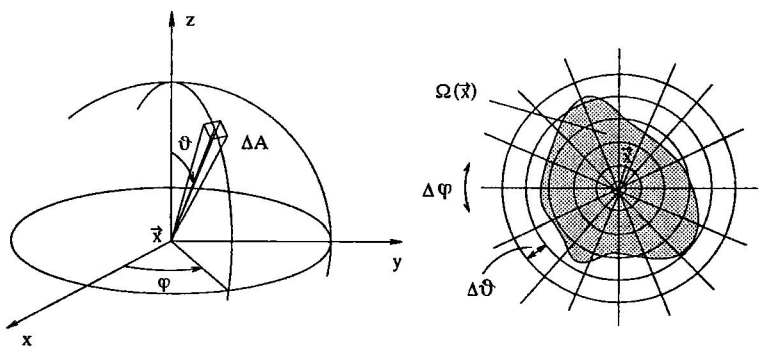

Fig.1. Solid angle visibility at surface point $\vec{x}$.

The problem which part of the region above the wafer is visible from a point on the surface is then reduced to a constant number of shadow tests.

3. Three-Dimensional Surface Advancement

There is still a need for improved topography evolution algorithms applicable to three-dimensional simulation. The algorithms which have been used in two-dimensional simulation programs are not easily extendable to three-dimensional simulation. Problems like surface loops resulting from a growing or etching surface intersecting with itself become very complex. We apply a new method which is based on morphological operations derived from image processing [5]. The material is represented using an array of cubic cells each characterized as vacuum or material cell. During the simulation a structuring element moves along the exposed surface and depending on the simulated process cells are removed or added which are located within the structuring element (midpoint of the cell is considered). The way how the topography evolves at a point on the surface depends on the spatial dimension and on the orientation of the applied structuring element as shown in Fig. 2. In case of physical vapor deposition the spatial dimension and the direction of a structuring element at a surface point are related to the growth vector calculated above (Eq. 1–3). This method allows an accurate and stable

simulation of arbitrary structures without loop formation and can be applied for general etching and deposition processes taking macroscopic rate models into account.

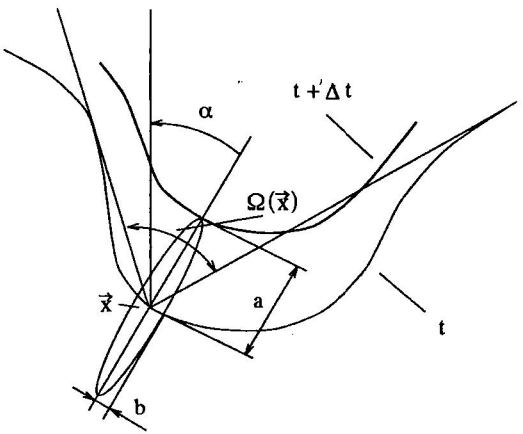

Fig.2. The structuring element for surface advancement.

4. Simulation Results

Fig. 3 shows sputter deposition in a square contact hole, assuming a distribution function $F = \cos^{2.0}(1.2\vartheta)$. The parameter $n = 2.0$ leads to lower side wall deposition, but to a higher deposition at the bottom of the via hole.

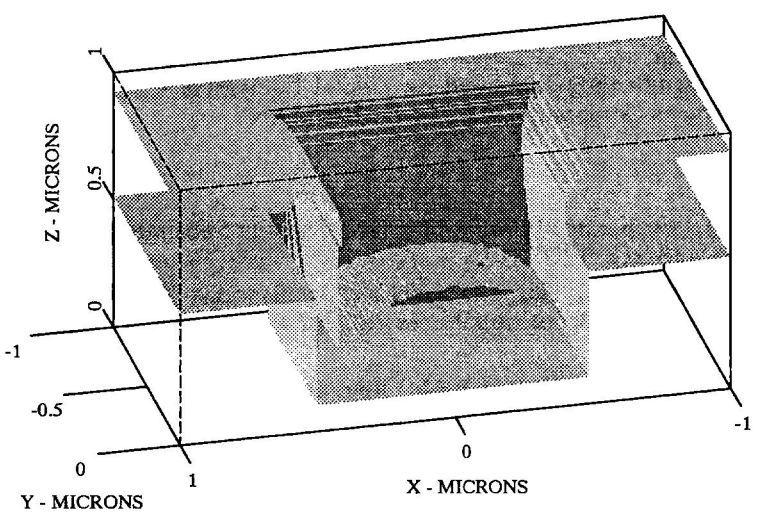

Fig.3. Sputter deposition over contact hole, flux distribution $F = \cos^{2.0}(1.2\vartheta)$.

The deposition rate for this example was 0.5 nm/s and the deposition time was 800s. Fig. 4 shows the simulation result after patterning and metallization of a circular contact hole. The simulation began with a circular mask opening of $1\mu m$ diameter. The first

isotropic etching step etches the substrate to a depth of 0.5 μm. This was followed by a reactive ion etching process for 0.5 μm additional material removal.

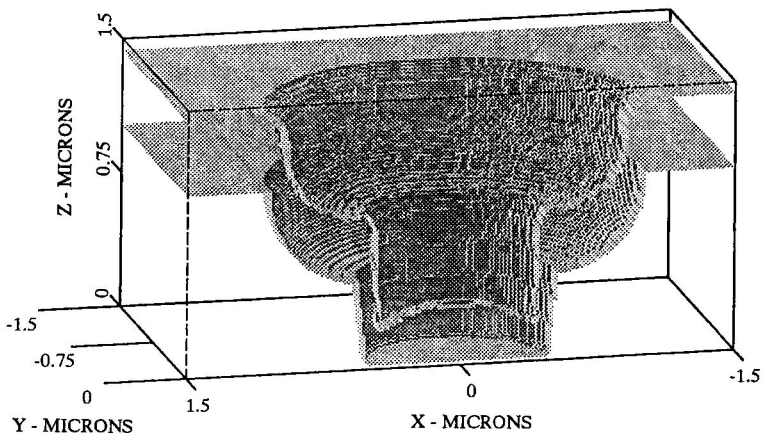

Fig.4. Patterning and metallization of contact hole, flux distribution $F = \cos(1.2\vartheta)$.

Finally, a metallization step with a deposition rate of 0.85 nm/s and a deposition time of 500s was performed, assuming a flux distribution function $F = \cos(1.2\vartheta)$. For all of the simulations 45·10 $(N_\varphi \cdot N_\vartheta)$ hemisphere patches are used for visibility calculations which leads to simulation times of about 20 min on a HP 9000/755 workstation for a typical example.

Acknowledgement
This work is significantly supported by Digital Equipment Corporation at Hudson, USA; and Siemens Corporation at Munich, GERMANY.

References

[1] I.A. Blech, "Evaporated Film Profiles Over Steps in Substrates", *Thin Solid Films*, Vol. 6, pp. 113-118, 1970.

[2] A.R. Neureuther, C.H. Ting, and C.Y. Liu, "Application of Line-Edge Profile Simulation to Thin-Film Deposition Processes", *IEEE Transactions on ED*, Vol. ED-27, pp. 1449-1455, 1980.

[3] Y. Eguchi, M.M. IslamRaja, J.P. McVittie, and K.C. Saraswat, "Profile Modeling of Physical Vapor Deposition of Ti and WSi_x", *Symposium on Process Physics And Modeling in Semiconductor Technology*, pp. 301-309, 1993.

[4] E.W. Scheckler and A.R. Neureuther, "Models and Algorithms for Three-Dimensional Topography Simulation with SAMPLE-3D", *IEEE Transactions on CAD*, Vol. 13, pp. 219-230, 1994.

[5] E. Strasser, G. Schrom, K. Wimmer, and S. Selberherr, "Accurate Simulation of Pattern Transfer Processes Using Minkowski Operations", *IEICE Transactions on Electronics*, Vol. E77-C, pp. 92-97, 1994.